*Quick*STOP® Collision Sensor
QS-25

*Quick***STOP**® is a dynamically variable collision sensor that operates on air pressure. Upon impact, the air chamber is opened, and the shutdown signal is immediately sent to the system controller.

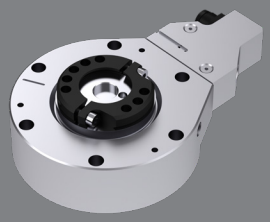

Advantages
- Dynamically Variable Trip Points
  - Programmable sensor at all speeds of operation
- Permanent Repeatability
  - Non-compressive, metal-to-metal seal
- Senses Angular and Compressive Forces
  - Protection in the X, Y, and Z axes
- Monitors Performance Readiness

SPECIFICATIONS

Model	Compliance Angle	Axial Compliance (z+)	Rotary Compliance	Operating Pressure	Torque Trip Point * (Mx and My)	Torque Trip Point * (Mz)	Repeatability at Tool Mounting Surfaces x and y	Rotational Repeatability	Average Response Time **	Mass
QS-25	±5 °	3.40 mm 0.134 in	No Limit	1.0 – 6.0 bar 14.5 – 87 psi	1.0 - 6.4 Nm 9 – 56 in-lb	1.0 - 6.4 Nm 9 – 56 in-lb	± 0.013 ± 0.0005	±0.024 °	15 ms	0.26 kg 0.56 lb

* Torque Trip Points are Continuously Variable.
** Average Response Time varies with Air Pressure and Speed of Impact.
Rotational Repeatability at Tool Mounting Surface Z **± 0.013 mm (± 0.0005 in)**
Operating Temperature **0 - 70 °C (32 - 158 °F)** (from QS-7 to QS-400) **/ 0 - 100 °C (32 - 212 °F)** (from QS-800 to QS-7500)
Noise Emissions (Sound Pressure) **≤ 70 dB(A) in jede Richtung**

Note: Specifications provided are maximum recommended limits under static conditions. For correct product sizing, consideration must be given to all dynamic forces, including manipulator inertia, tooling configuration, and external process forces. Please contact EFFECTO Applications Engineering for correct product sizing assistance.

SECTIONAL DIAGRAM

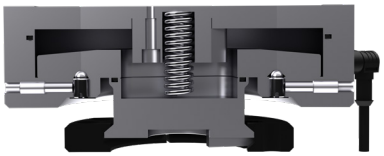

Switch Information
High reliability aircraft snap acting type.
UL/CSA rated at 3 amps, 120 VAC.
Average mechanical life: 7 million cycles
UL recognized rating: 42.4 VDC Max., 3 amps Max.

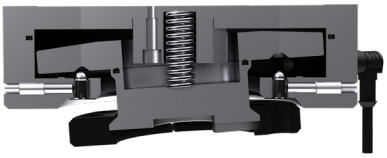

EFFECTO®

PRODUCT INFORMATION

10.26_Rev.02

- **Coolant resistance**
Includes protective sleeve, coolant-resistant switch assembly and coolant-resistant signal plug for additional protection against environmental conditions.

- **Arc welding**
Designed for arc welding, laser cutting or plasma cutting; equipped with a heat-resistant cable, a metal shield to protect the pressure chamber, an insulating plate and an inverted design to prevent dirt accumulation.

- **Robot-specific**
Ready-to-mount adapter plates in a wide range of different variants for easy mounting on tools and robots.

QS-25 Schematic

Dimensions are in millimeters

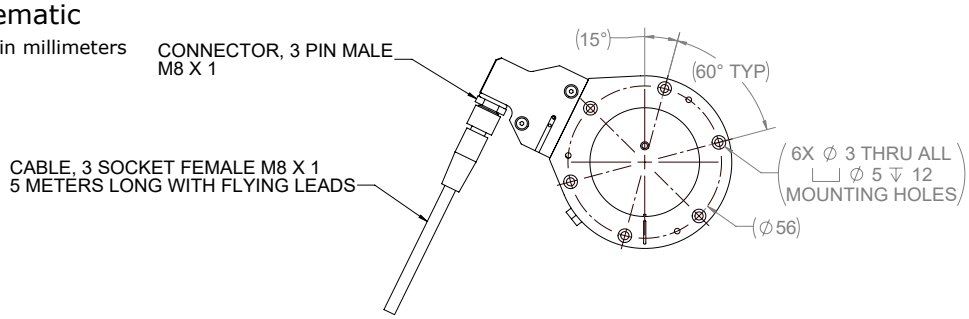

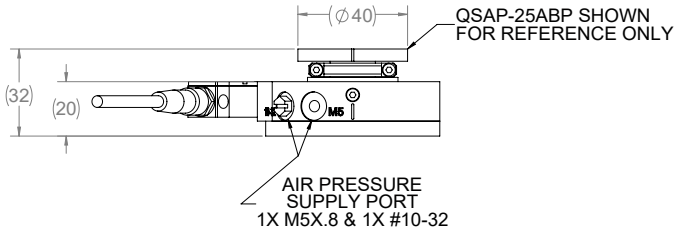

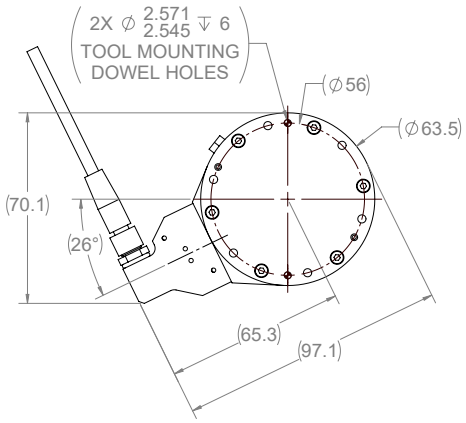

Switch Wiring

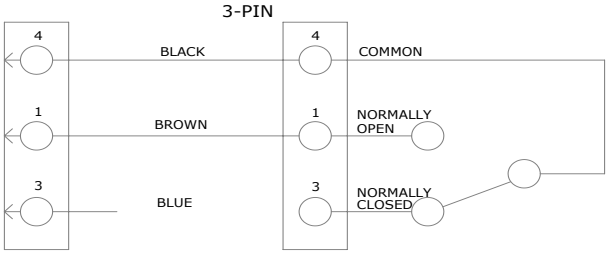

Effecto Group S.p.A.
Via Roma, 141/143
28017 San Maurizio d'Opaglio (NO) - IT
Tel. +39 0322 96142
info@effecto.com

Effecto, Inc.
648 Saratoga Road
Glenville, NY 12302 - US
Tel. +1 518 384 1000
info@us.effecto.com

Effecto GmbH
Liegnitzer Str. 6
82194 Gröbenzell - DE
Tel. +49 8142 59397 0
info@de.effecto.com

www.effecto.com