| SIZE | DRAWING NUMBER | REV |
|---|---|---|
| C | 94502-C1003A | 00 |

REVISIONS

| ZONE | REV | DESCRIPTION | DR | CHK | DATE | ECR/ESR NO. |
|---|---|---|---|---|---|---|
| | 00 | RELEASE FOR MANUFACTURE | | | | |

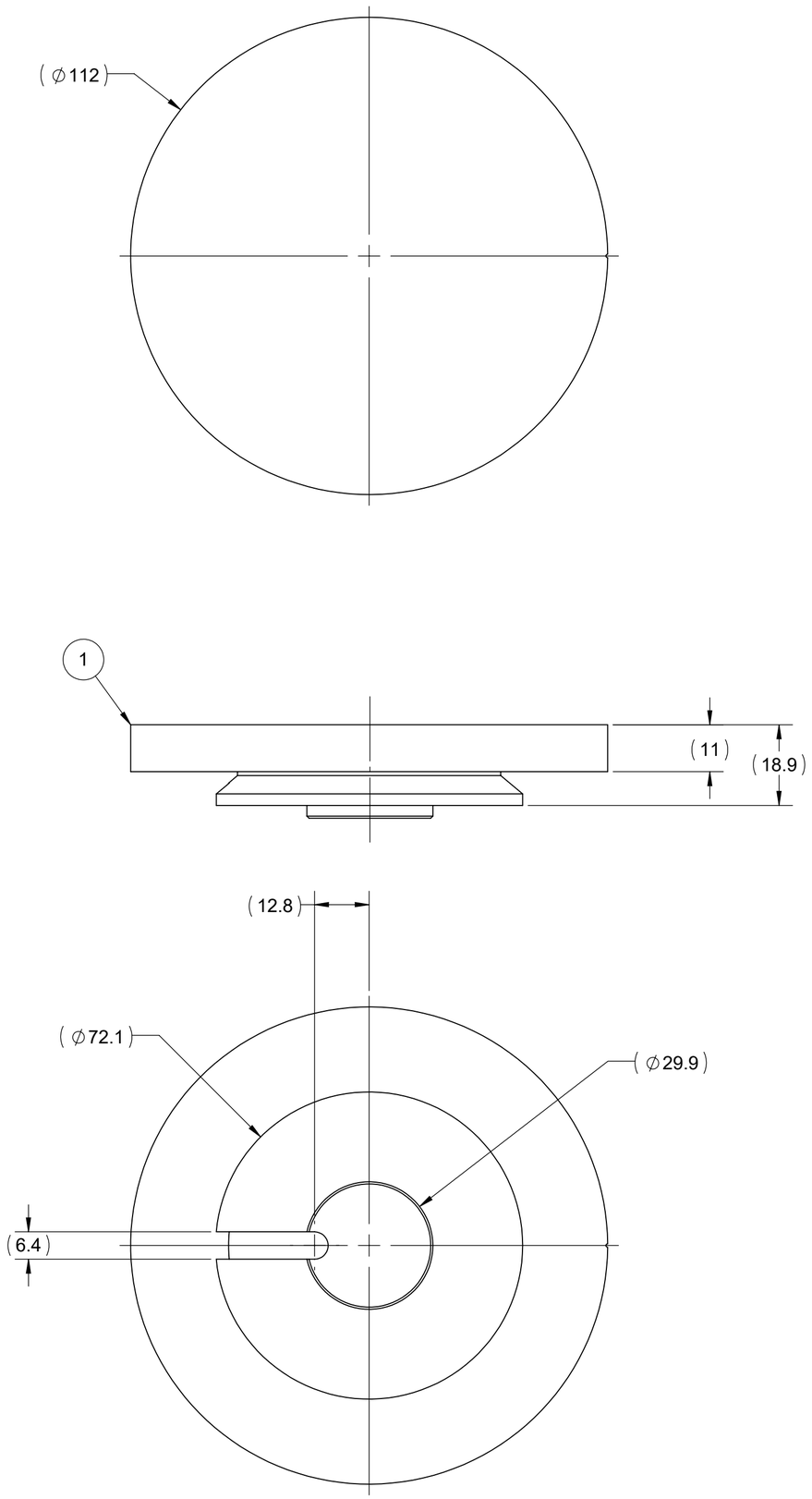


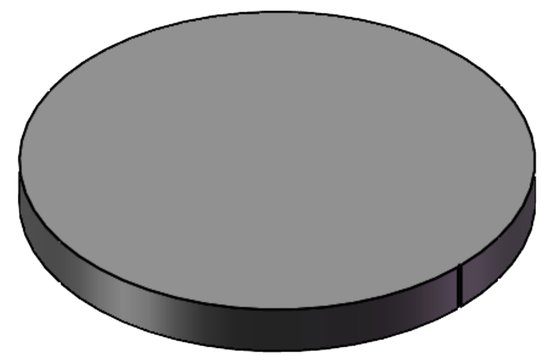

| ITEM NO. | QTY | PART NO. | DESCRIPTION |
|---|---|---|---|
| 1 | 1 | 90510-C1059A | PLATE, ADAPTOR QS-800 |

THIRD ANGLE PROJECTION

THE INFORMATION CONTAINED HERE IN IS THE SOLE PROPERTY OF APPLIED ROBOTICS INC. THE INFORMATION IN THE DOCUMENT/FILE IS SUBJECT TO CHANGE WITHOUT NOTICE. APPLIED ROBOTICS MAKES NO WARRANTY OF ANY KIND WITH REGARD TO THIS DOCUMENT/FILE, INCLUDING, BUT NOT LIMITED TO IMPLIED WARRANTIES OR FITNESS FOR A PARTICULAR PURPOSE. APPLIED ROBOTICS INC. SHALL NOT BE LIABLE FOR ANY ERRORS CONTAINED HERE IN OR FOR INCIDENTAL OR CONSEQUENTIAL DAMAGES IN CONNECTION WITH THE PERFORMANCE OR USE OF THIS DOCUMENT/FILE.

DIM. AND TOLERANCING IN ACCORDANCE WITH ASMEY 14.5-2009

PRINT DATE 10/30/2024

METRIC

**UNLESS OTHERWISE SPECIFIED:**

UNTOLERANCED DIMS ARE BASIC

.25 A B C

∅ .25 (M) A B C

ALL HOLE DIAMETERS +/- 0.25

INTERNAL RADII & BROKEN EDGES TO BE .13-.38

ALL SURFACE FINISHES 1.6Ra

MAT'L: Material <not specified>

SURFACE TREATMENT:

DR: K. KNAPP 04/29/1994

CHK: SEE REVISION BLOCK

ENG:

MFG:

QC:

3D MODEL NUMBER: 94502-C1003A

SCALE: 1:1

DO NOT SCALE DRAWING

ISO 9001 REGISTERED

EFFECTO®
648 Saratoga Rd. Glenville, NY 12302
www.appliedrobotics.com

TITLE:

# OUTLINE QSAP-800BP QuickSTOP QS-800 BLANK ADAPTOR PLATE

| SIZE | DRAWING NUMBER | REV |
|---|---|---|
| C | 94502-C1003A | 00 |

Weight: 0.82 kg | RoHs COMPLIANT: | SHT. 1 OF 1