SIZE	DRAWING NUMBER	REV
D	0007-D94A	02

REVISIONS						
ZONE	REV	DESCRIPTION	DR	CHK	DATE	ECR/ESR NO.
	02	QSC-4-5.0-U WAS QSC-4-6.0-U	PS	JE	8-13-01	DGAP-4Z2FBU

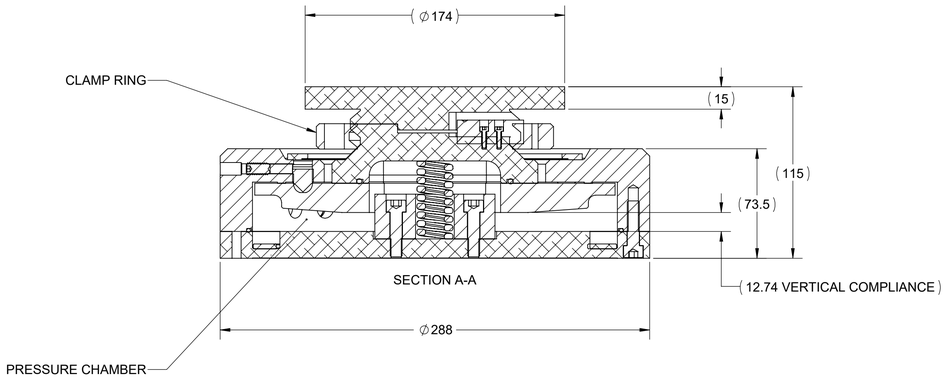

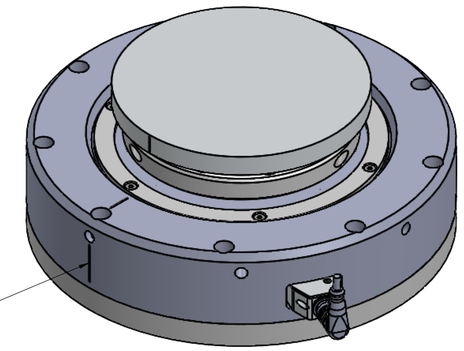

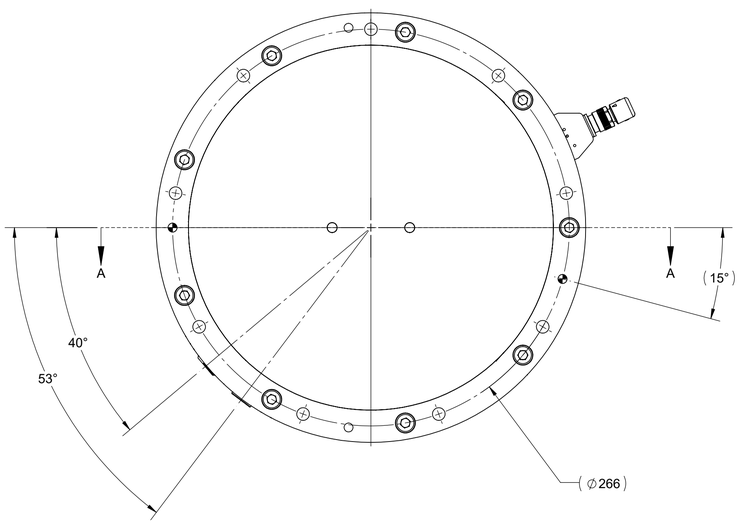

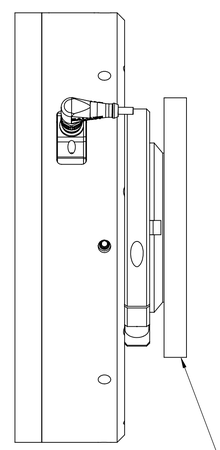

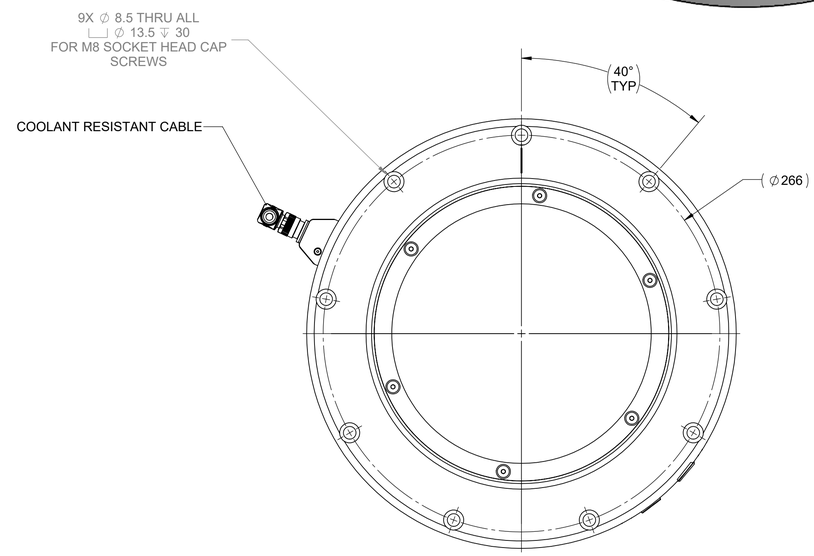

CONTACT EFFECTO FOR AVAILABLE
ROBOT ADAPTER INTERFACE PLATES.
QSAP-3000/4500/7500BP SHOWN FOR REFERENCE ONLY.

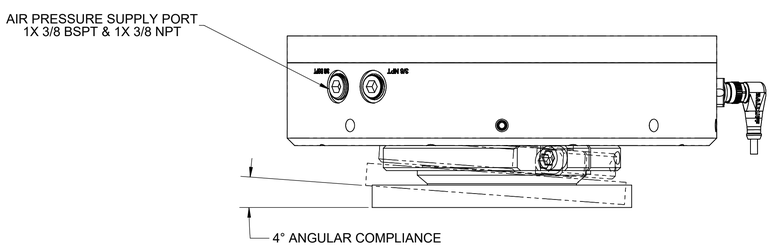

PRINT DATE
10/24/2024

THIRD ANGLE PROJECTION

THE INFORMATION CONTAINED HERE IN IS THE SOLE PROPERTY OF APPLIED ROBOTICS INC. THE INFORMATION IN THE DOCUMENT/FILE IS SUBJECT TO CHANGE WITHOUT NOTICE. APPLIED ROBOTICS MAKES NO WARRANTY OF ANY KIND WITH REGARD TO THIS DOCUMENT/FILE, INCLUDING, BUT NOT LIMITED TO IMPLIED WARRANTIES OR FITNESS FOR A PARTICULAR PURPOSE. APPLIED ROBOTICS INC. SHALL NOT BE LIABLE FOR ANY ERRORS CONTAINED HERE IN OR FOR INCIDENTAL OR CONSEQUENTIAL DAMAGES IN CONNECTION WITH THE PERFORMANCE OR USE OF THIS DOCUMENT/FILE.

DIM. AND TOLERANCING IN ACCORDANCE WITH ANSI Y14.5M-1994

METRIC

UNLESS OTHERWISE SPECIFIED:

UNTOLERANCED DIMS ARE BASIC

⌓ .25 A B C

⌖ ∅ .25 Ⓜ A B C

ALL HOLE DIAMETERS +/- 0.25

INTERNAL RADII & BROKEN EDGES TO BE .13-.38
ALL SURFACE FINISHES 1.6Ra

MAT'L:

SURFACE TREATMENT:

DR:	P.SLAVINSKI
CHK:	SEE REVISION BLOCK
ENG:	P.SLAVINSKI
MFG:	D.S.
QC:	D.P.

3D MODEL NUMBER:
0007-D94A

SCALE: 1:2
DO NOT SCALE DRAWING

ISO 9001
REGISTERED

EFFECTO®
648 Saratoga Rd. Glenville, NY 12302
www.appliedrobotics.com

TITLE:
OUTLINE QS-7500LRNP-T4
QUICKSTOP QS-7500 UNIT
W/ SWITCH

SIZE	DRAWING NUMBER	REV
D	0007-D94A	02

WEIGHT: 12.98 kg | RoHs COMPLIANT: YES | SHT. 1 OF 1