SIZE	DRAWING NUMBER	REV
C	94501-C1023A	06

REVISIONS

REV	DESCRIPTION	DR	CHK	DATE	ECR/ESR NO.
01	ITEM 13 WAS 93505-C1076A	KK	CA	8-12-94	NA
02	O2 UPDATE ADDRESS/22 WAS NAMEPLATE	ALM	JE	7-26-95	NA
03	ADDED NOTE TO ITEM 15	ALM	JE	2-16-96	NA
04	UPDATED BORDER/FORMAT	ALM	ALM	3-17-96	NA
05	ADDED ITEM 32 LABEL NP	DJG	JE	9-2-97	NA
06	ADDED ITEM 3 QS-25SUB1	DW	DW	12-3-98	KROS-42HJLX

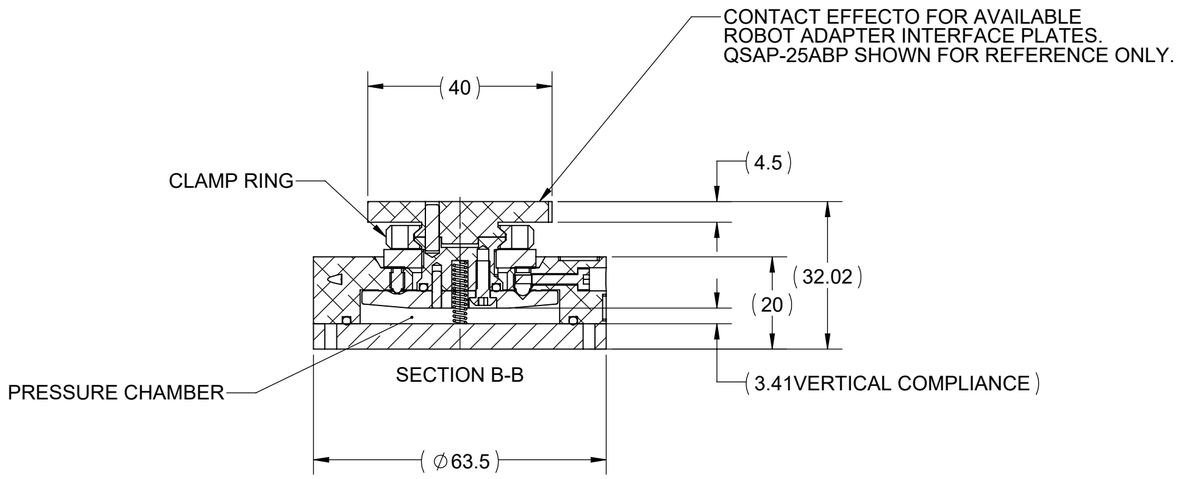

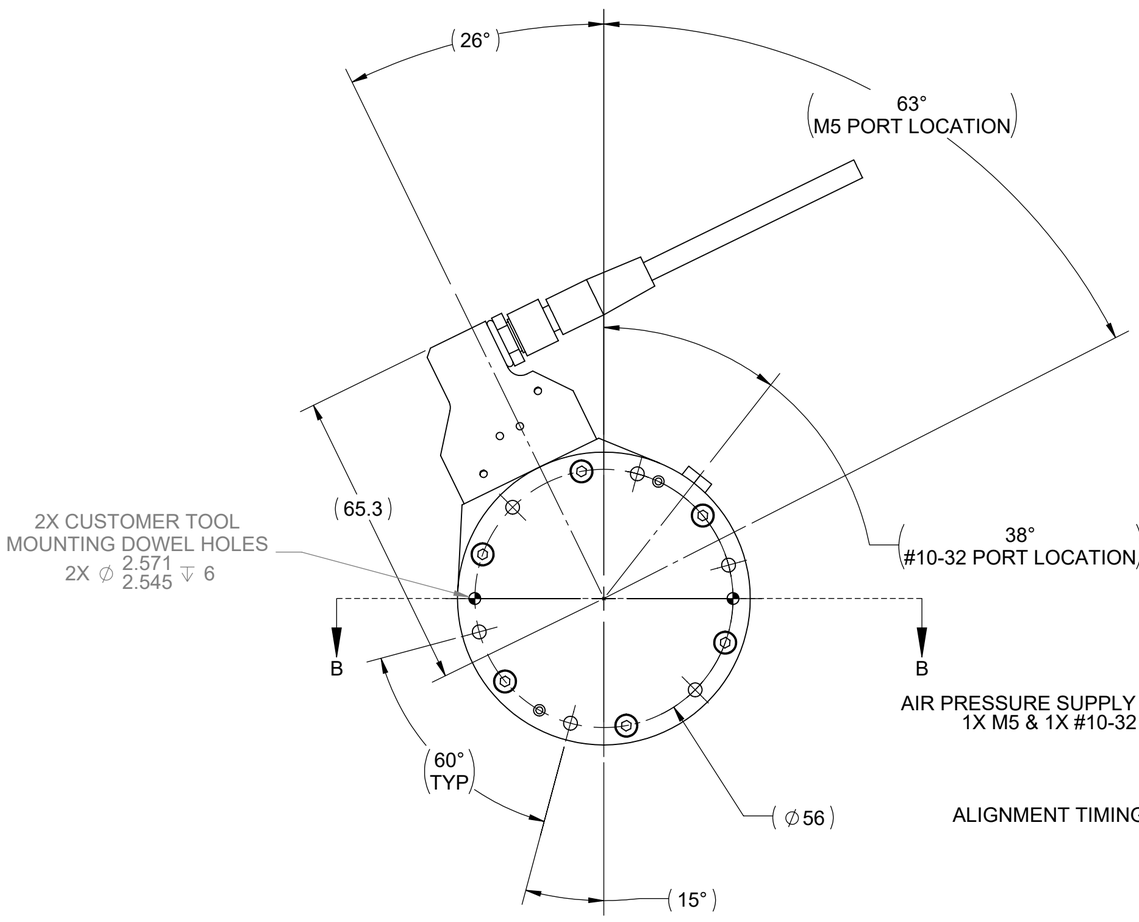

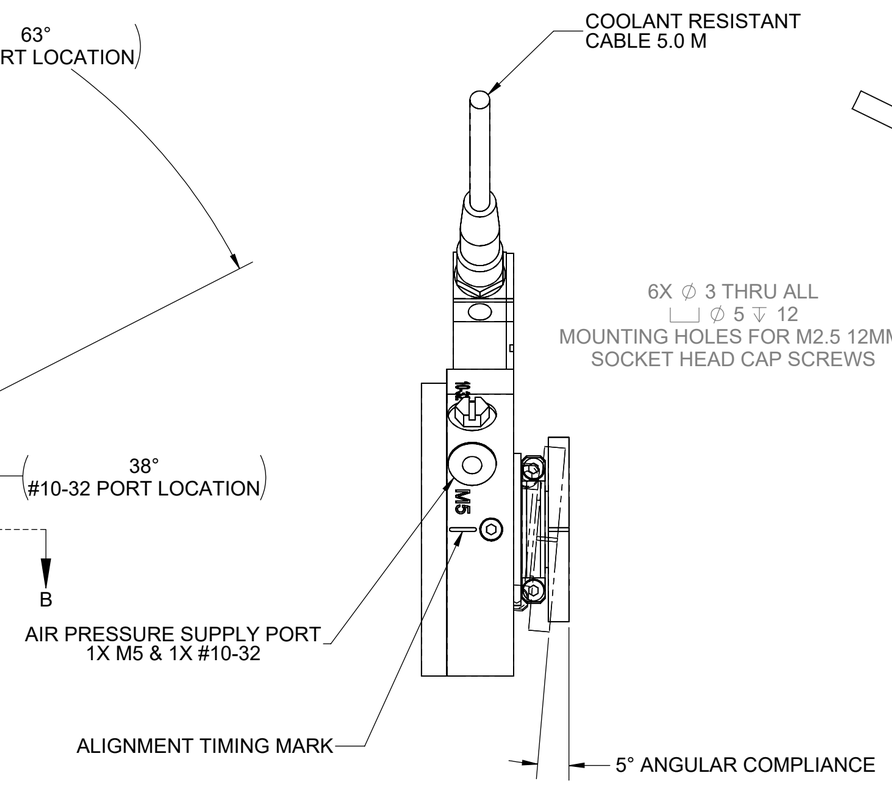

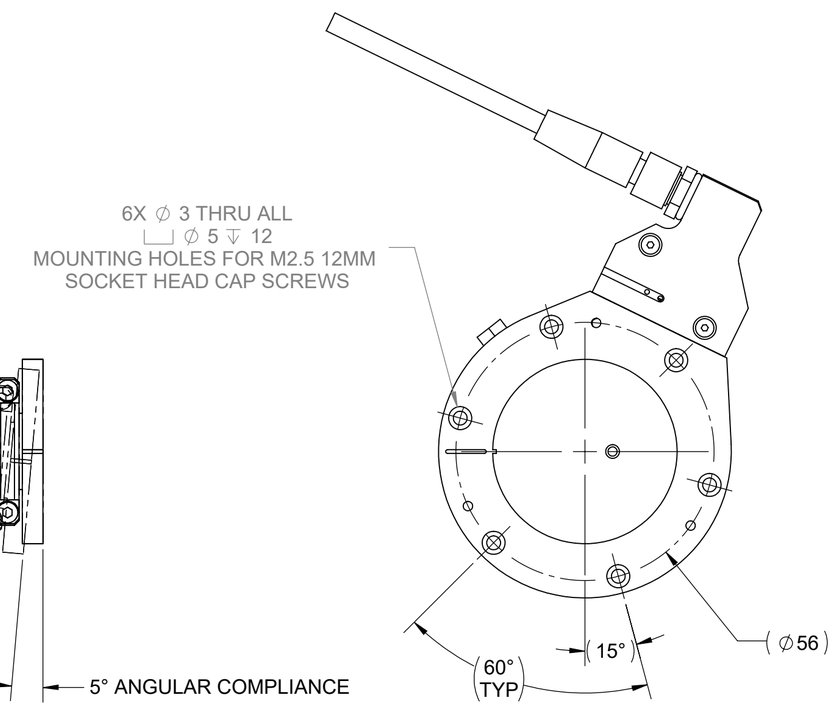

THIRD ANGLE PROJECTION

THE INFORMATION CONTAINED HERE IN IS THE SOLE PROPERTY OF APPLIED ROBOTICS INC. THE INFORMATION IN THE DOCUMENT/FILE IS SUBJECT TO CHANGE WITHOUT NOTICE. APPLIED ROBOTICS MAKES NO WARRANTY OF ANY KIND WITH REGARD TO THIS DOCUMENT/FILE, INCLUDING, BUT NOT LIMITED TO IMPLIED WARRANTIES OR FITNESS FOR A PARTICULAR PURPOSE. APPLIED ROBOTICS INC. SHALL NOT BE LIABLE FOR ANY ERRORS CONTAINED HERE IN OR FOR INCIDENTAL OR CONSEQUENTIAL DAMAGES IN CONNECTION WITH THE PERFORMANCE OR USE OF THIS DOCUMENT/FILE.

DIM. AND TOLERANCING IN ACCORDANCE WITH ASMEY 14.5-2009

PRINT DATE 10/24/2024

METRIC

UNLESS OTHERWISE SPECIFIED:

UNTOLERANCED DIMS ARE BASIC

⌓	.25	A	B	C
⌖	∅ .25Ⓜ	A	B	C

ALL HOLE DIAMETERS +/- 0.25

INTERNAL RADII & BROKEN EDGES TO BE .13-.38

ALL SURFACE FINISHES 1.6Ra

MAT'L:

SURFACE TREATMENT:

DR: K. KNAPP

CHK: SEE REVISION BLOCK

ENG:

MFG:

QC:

3D MODEL NUMBER: 94501-C1023A

SCALE: 1:1
DO NOT SCALE DRAWING

ISO 9001 REGISTERED

EFFECTO®
648 Saratoga Rd. Glenville, NY 12302
www.appliedrobotics.com

TITLE:

QS-25ANP-T3
QUICKSTOP QS-25 UNIT W/ SWITCH

SIZE	DRAWING NUMBER	REV
C	94501-C1023A	06

Weight: 0.19 kg | RoHs COMPLIANT: YES | SHT. 1 OF 1