SIZE	DRAWING NUMBER	REV
D	94501-D1029A	09

REVISIONS						
ZONE	REV		DR	CHK	DATE	ECR/ESR NO.
	08	RELEASE FOR MANUFACTURE	KK	JE	4-20-94	NA

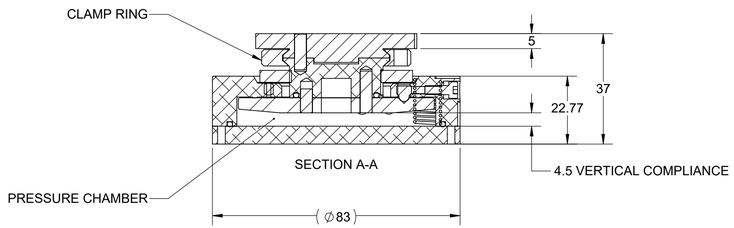

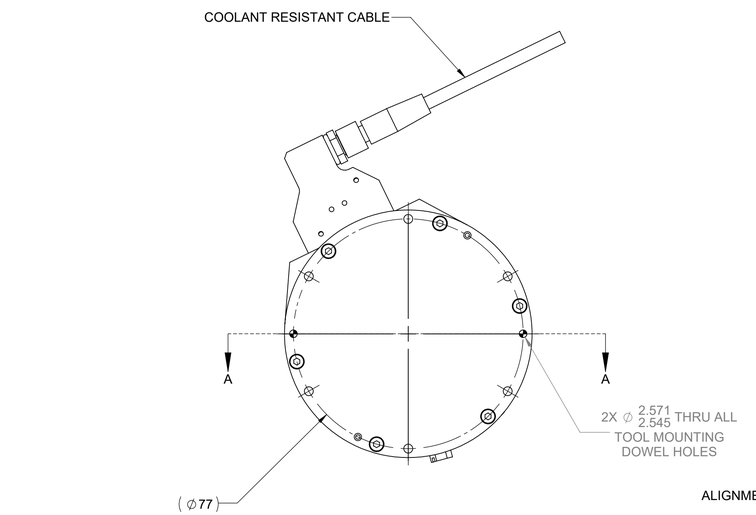

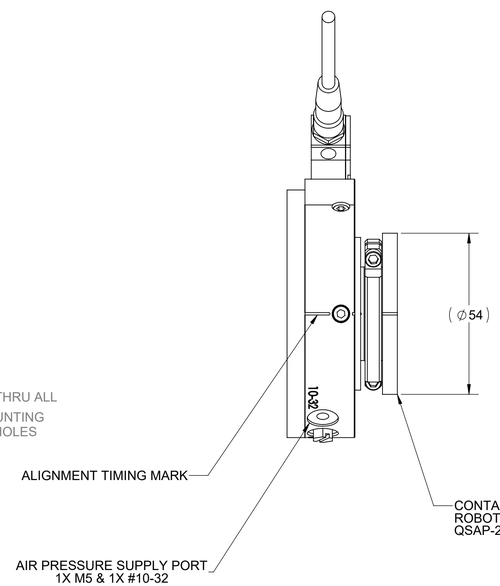

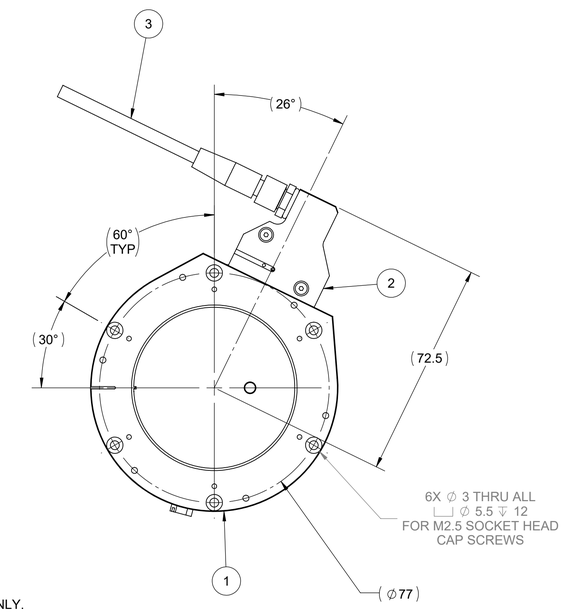

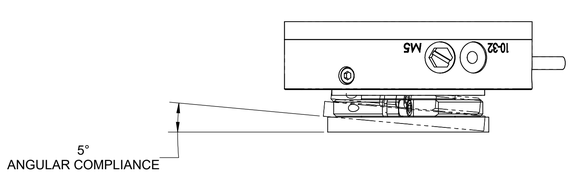

ITEM NO.	QTY	PART NO.	DESCRIPTION
4	1	94501-B1084A	QSAP-100BP
3	1	93505-P1065	CABLE, QS-SM W/CONN, SOCKET, 5M
2	1	93505-C1015A	SUBASSY, SWITCH QS-CR/AW SM
1	1	98508-D1079	QS-100SUB1

THIRD ANGLE PROJECTION

THE INFORMATION CONTAINED HERE IN IS THE SOLE PROPERTY OF APPLIED ROBOTICS INC. THE INFORMATION IN THE DOCUMENT/FILE IS SUBJECT TO CHANGE WITHOUT NOTICE. APPLIED ROBOTICS MAKES NO WARRANTY OF ANY KIND WITH REGARD TO THIS DOCUMENT/FILE, INCLUDING, BUT NOT LIMITED TO IMPLIED WARRANTIES OR FITNESS FOR A PARTICULAR PURPOSE. APPLIED ROBOTICS INC. SHALL NOT BE LIABLE FOR ANY ERRORS CONTAINED HERE IN OR FOR INCIDENTAL OR CONSEQUENTIAL DAMAGES IN CONNECTION WITH THE PERFORMANCE OR USE OF THIS DOCUMENT/FILE.

DIM. AND TOLERANCING IN ACCORDANCE WITH ANSI Y14.5M-1994

METRIC

UNLESS OTHERWISE SPECIFIED:

UNTOLERANCED DIMS ARE BASIC

⌓ .25 A B C

⌖ ∅ .25 Ⓜ A B C

ALL HOLE DIAMETERS +/- 0.25

INTERNAL RADII & BROKEN EDGES TO BE .13-.38
ALL SURFACE FINISHES 1.6Ra

MAT'L:

SURFACE TREATMENT:

DR:	K. KNAPP 04/20/1994
CHK:	SEE REVISION BLOCK
ENG:	K. KNAPP 04/20/1994
MFG:	
QC:	

3D MODEL NUMBER: 94501-D1029A

SCALE: 1:1
DO NOT SCALE DRAWING

ISO 9001 REGISTERED

EFFECTO®
648 Saratoga Rd. Glenville, NY 12302
www.appliedrobotics.com

TITLE:

OUTLINE QS-100NP-T3 QuickSTOP QS-100 UNIT w/ SWITCH

SIZE	DRAWING NUMBER	REV
D	94501-D1029A	09

WEIGHT: 0.4 kg | RoHs COMPLIANT: YES | SHT. 1 OF 1

PRINT DATE
10/23/2024