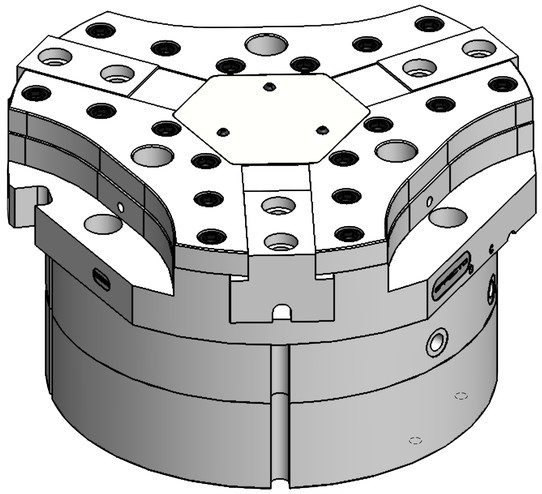

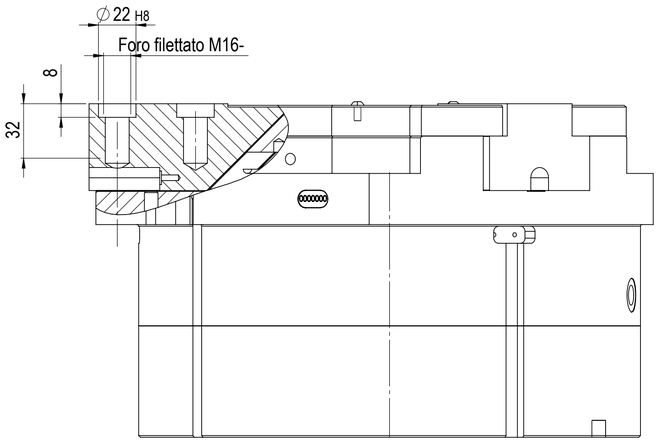

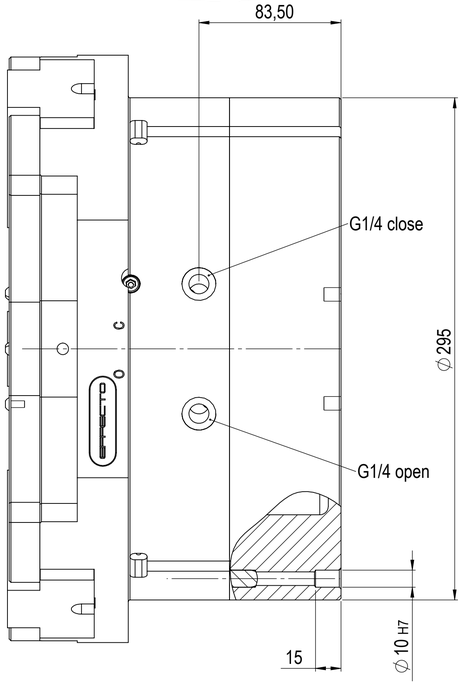

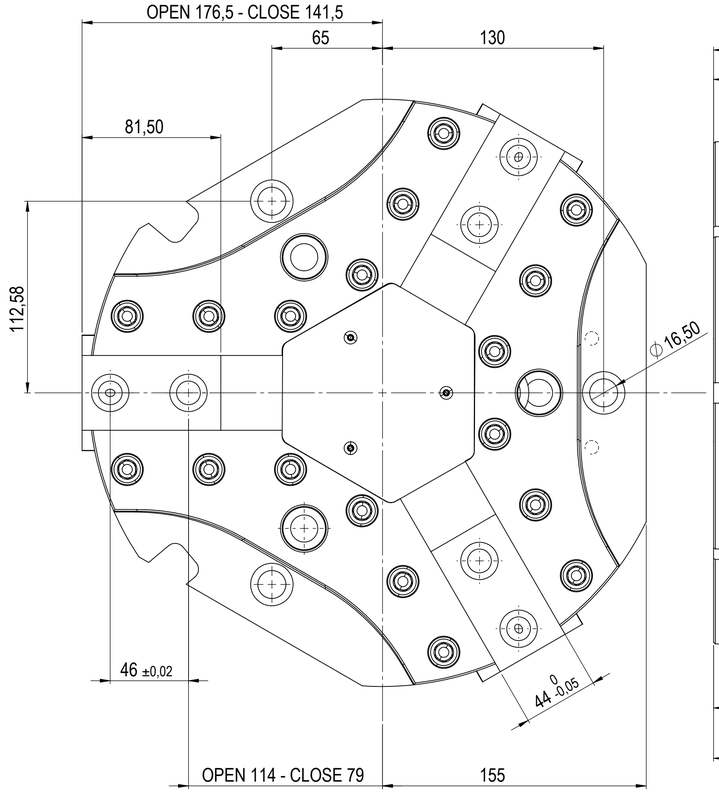

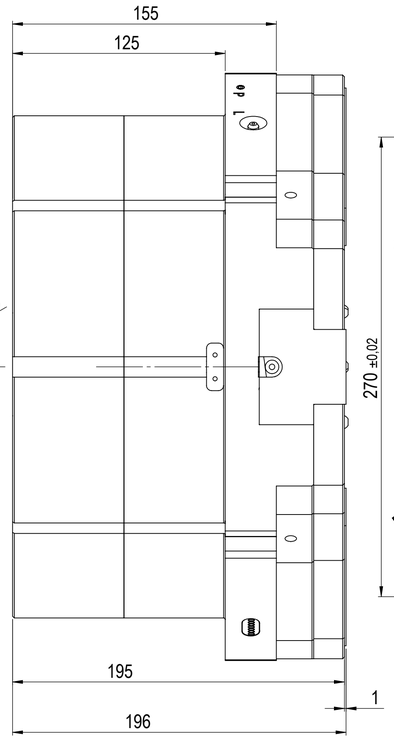

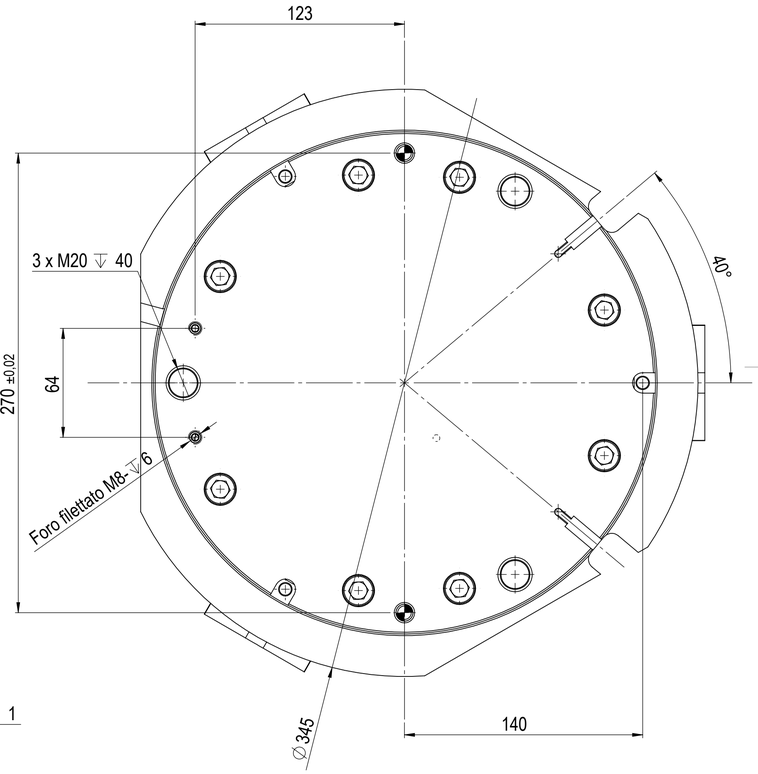

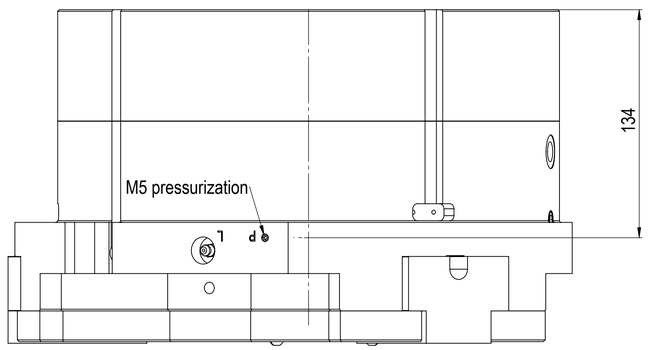

Stroke per Jaw: 35 mm
Closing Force: 6000+6000+6000 N
Opening Force: 3150+3150+3150 N
Repeat accuracy: ± 0.03 mm
Nominal Operating Pressure: 6 bar
Max Operating Pressure: 8 bar
Fluid comsumption double stroke: 4836 cm3

EFFECTO	Via Roma 141-143 28077 San Maurizio d'Opaglio (NO) Tel. +39 0322961-62 Via Dei Prima Mazzola# 4 26012 Castelleone (CR) Tel. +39 0374351138 www.effectogroup.com	**OUTLINE** DO NOT SCALE THE DRAWING	
THE INFORMATION CONTAINED HERE IN IS THE SOLE PROPERTY OF EFFECTOGROUP S.P.A. THE DIMENSIONS ARE INDICATIVE AND SUSCEPTIBLE TO CHANGE DUE TO TECHNICAL IMPROVEMENTS. WE RESERVE THE RIGHT TO MAKE CHANGES WITHOUT NOTICE.	Eng: 30/04/2026	Commercial Description: HPG-330-P-35-U-CM-8-P-B-S	
	PROD:M.Tozzini 30/04/2026		
	QC out: - -	Description: Gripper HPG 330 CM	
	Sales: - -		
FIRST ANGLE PROJECTION	General Tolerances in accordance with ISO 2768-m CENTERING HOLE: ISO 6411	Part Number: HP330NCM	A1
	DATA: 08/05/2026	Weight: 40.70Kg	Sheet: 1 of 2 Rev:00