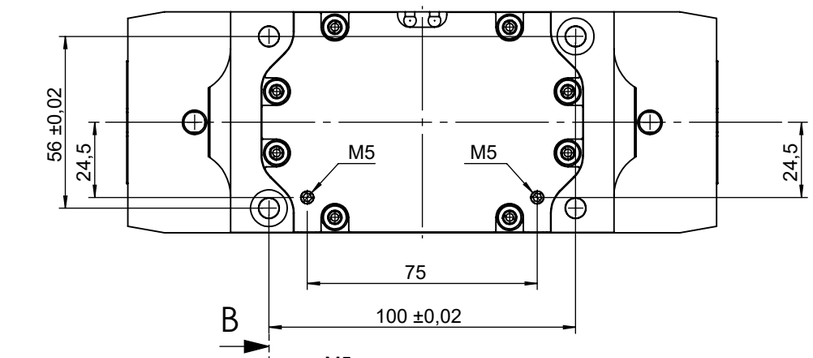

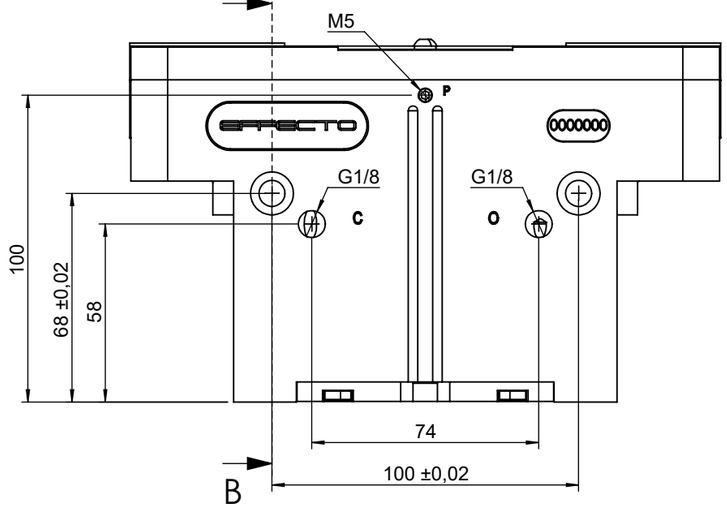

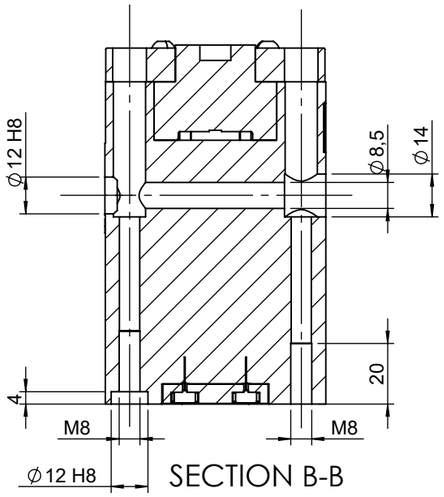

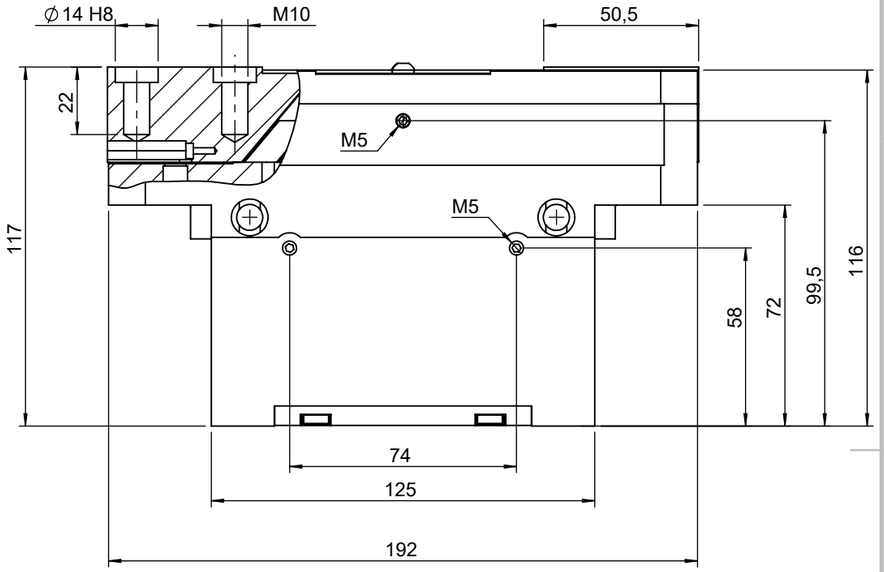

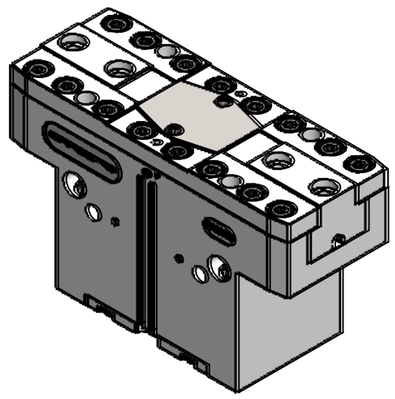

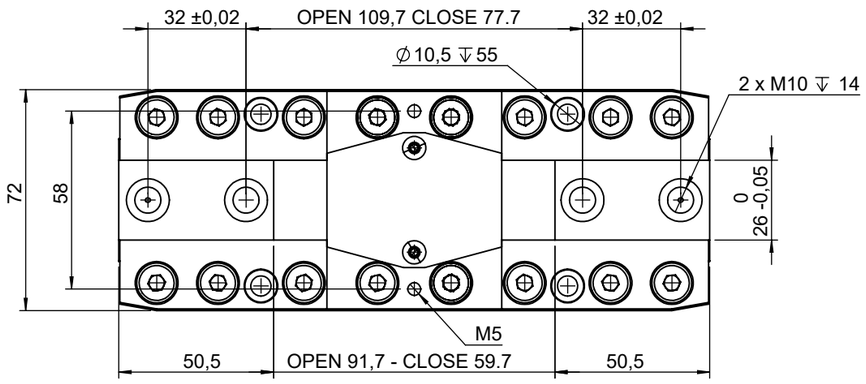

Stroke per Jaw: 16 mm

Closing Force: 680+680 N

Opening Force: 1390+1390 N

Repeat accuracy: ± 0.15 mm

Nominal Operating Pressure: 6 bar

Max Operating Pressure: 8 bar

Fluid comsumption double stroke: 338 cm3

EFFECTO®

Via Roma 141-143
28017 San Maurizio d'Opaglio (NO)
Tel. +39 0322296142
Via Don Primo Mazzolari 4
26012 Castelleone (CR):
Tel. +39 037435138
www.effectogroup.com

OUTLINE

DO NOT SCALE THE DRAWING

THE INFORMATION CONTAINED HERE IN IS THE SOLE PROPERTY OF EFFECTOGROUP S.P.A. THE DIMENSIONS ARE INDICATIVE AND SUSCEPTIBLE TO CHANGE DUE TO TECHNICAL IMPROVEMENTS.WE RESERVE THE RIGHT TO MAKE CHANGES WITHOUT NOTICE.

Eng: 23/04/2026

PROD:M.Tozzini 24/04/2026

QC out:- -

Sales: - -

Commercial Description: HPG-216-P-16-U-AM-8-P-B-S

Description: Gripper HPG216 MA

FIRST ANGLE PROJECTION

General Tolerances in accordance with ISO 2768-m H
CENTERING HOLE: ISO 6411

Part Number: HP216NMA

A3

DATA: 08/05/2026

Weight: 3.77Kg

Sheet: 2 of 2

Rev:00