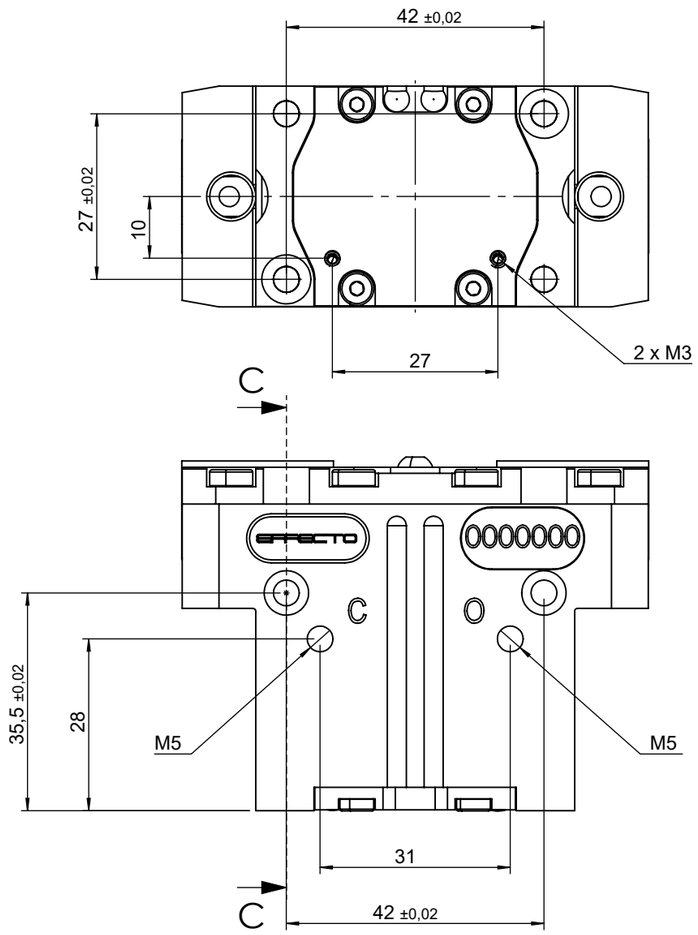

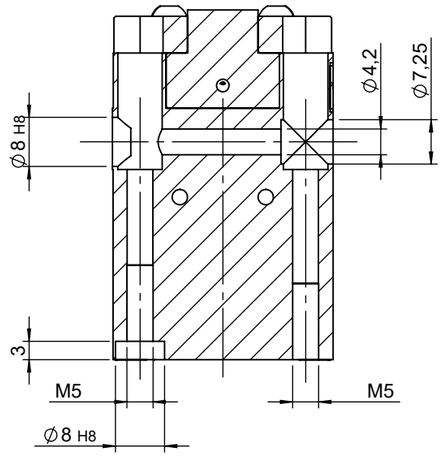

SECTION C-C

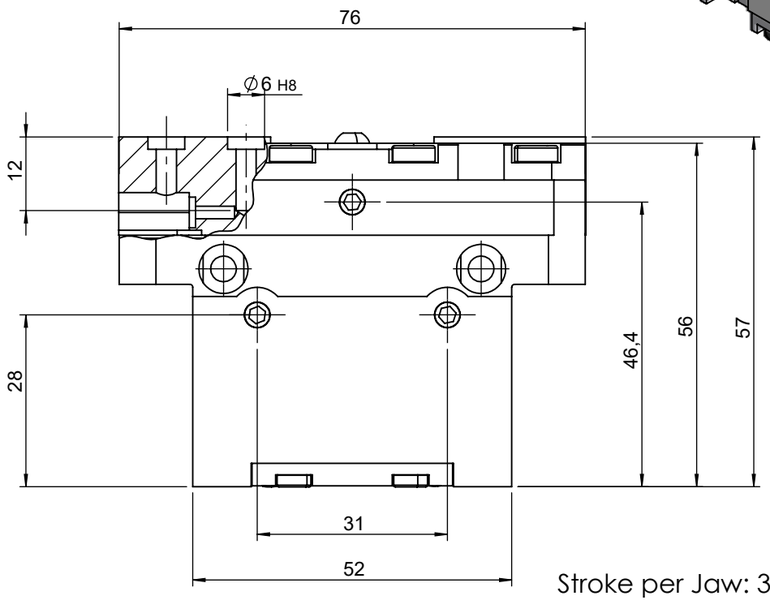

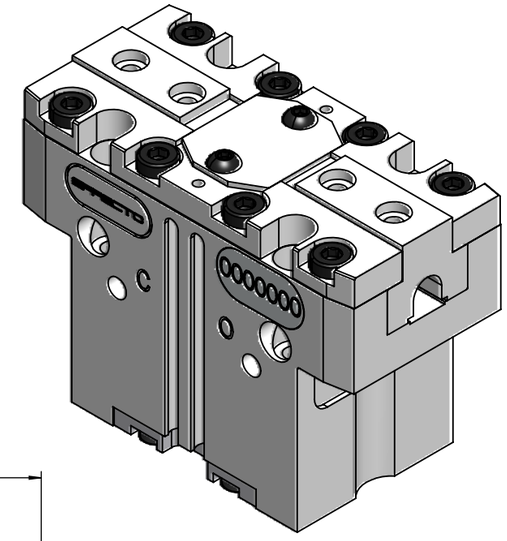

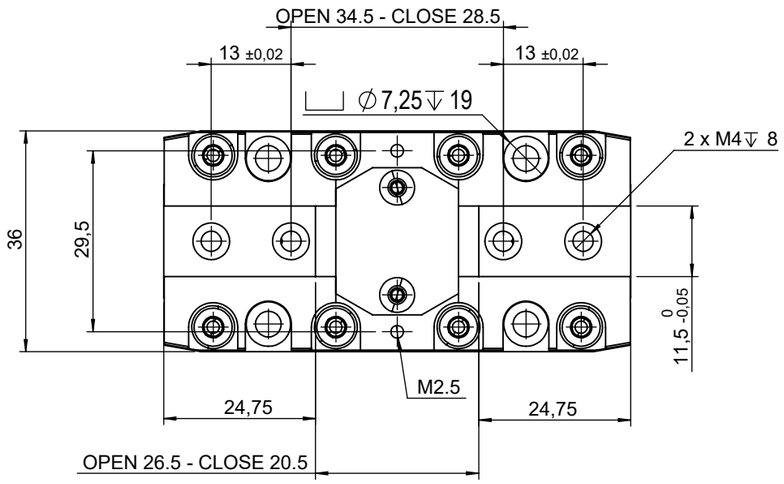

Stroke per Jaw: 3 mm

Closing Force: 230+230 N

Opening Force: 440+440 N

Repeat accuracy: ± 0.01 mm

Nominal Operating Pressure: 6 bar

Max Operating Pressure: 8 bar

Fluid comsumption double stroke: 23 cm3

EFFECTO®

Via Roma 141-143
28017 San Maurizio d'Opaglio (NO)
Tel. +39 0322296142
Via Don Primo Mazzolari 4
26012 Castelleone (CR):
Tel. +39 037435138
www.effectogroup.com

OUTLINE

DO NOT SCALE THE DRAWING

THE INFORMATION CONTAINED HERE IN IS THE SOLE PROPERTY OF EFFECTOGROUP S.P.A. THE DIMENSIONS ARE INDICATIVE AND SUSCEPTIBLE TO CHANGE DUE TO TECHNICAL IMPROVEMENTS.WE RESERVE THE RIGHT TO MAKE CHANGES WITHOUT NOTICE.

Eng: 23/04/2026	Commercial Description: HPG-206-P-3-U-AM-8-P-B-S
PROD:M.Tozzini 23/04/2026	
QC out:- -	Description: Gripper HPG 206 SMA
Sales: - -	
FIRST ANGLE PROJECTION	General Tolerances in accordance with ISO 2768-m H CENTERING HOLE: ISO 6411
	Part Number: HP206SMA — A3
DATA: 08/05/2026	Weight: 0.38Kg — Sheet: 2 of 2 — Rev:00