SIZE	DRAWING NUMBER	REV
D	1507-D67A	01

REVISIONS						
ZONE	REV	DESCRIPTION	DR	CHK	DATE	ECR/ESR NO.

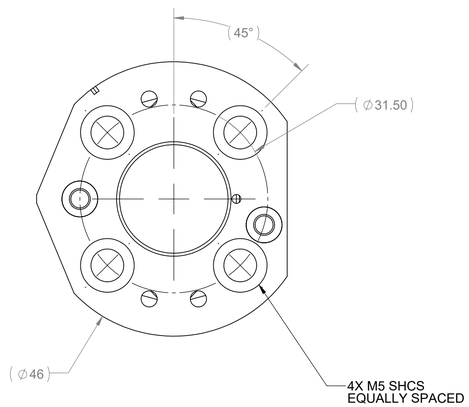

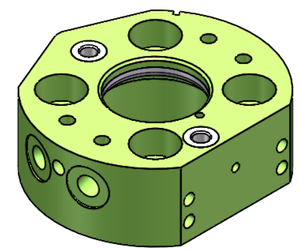

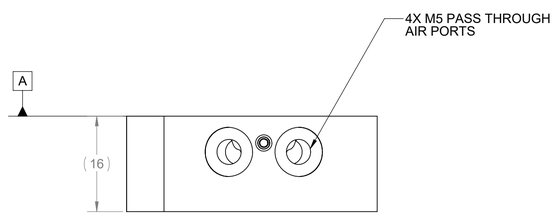

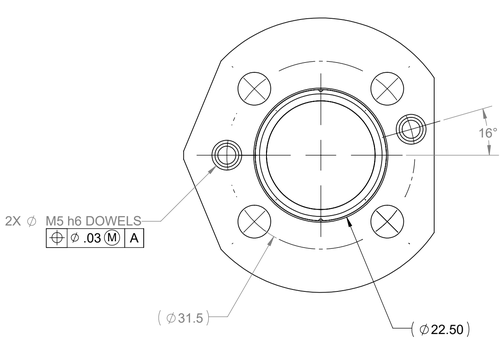

PRINT DATE
10/30/2024

THIRD ANGLE PROJECTION

THE INFORMATION CONTAINED HERE IN IS THE SOLE PROPERTY OF APPLIED ROBOTICS INC. THE INFORMATION IN THE DOCUMENT/FILE IS SUBJECT TO CHANGE WITHOUT NOTICE. APPLIED ROBOTICS MAKES NO WARRANTY OF ANY KIND WITH REGARD TO THIS DOCUMENT/FILE, INCLUDING, BUT NOT LIMITED TO IMPLIED WARRANTIES OR FITNESS FOR A PARTICULAR PURPOSE. APPLIED ROBOTICS INC. SHALL NOT BE LIABLE FOR ANY ERRORS CONTAINED HERE IN OR FOR INCIDENTAL OR CONSEQUENTIAL DAMAGES IN CONNECTION WITH THE PERFORMANCE OR USE OF THIS DOCUMENT/FILE.

DIM. AND TOLERANCING IN ACCORDANCE WITH ANSI Y14.5M-1994

METRIC
UNLESS OTHERWISE SPECIFIED:
UNTOLERANCED DIMS ARE BASIC
.25 A B C
∅ .25 M A B C
ALL HOLE DIAMETERS +/- 0.25
INTERNAL RADII & BROKEN EDGES TO BE .13-.38
ALL SURFACE FINISHES 1.6Ra

MAT'L:
Material <not specified>

SURFACE TREATMENT:
-

DR:	J. VALLELUNGA
CHK:	S. ATKINS
ENG:	J. DELMONACO
MFG:	C. BEST
QC:	M. DUDNATH

3D MODEL NUMBER:
1507-D67A

SCALE: 2:1
DO NOT SCALE DRAWING

ISO 9001
REGISTERED

Applied Robotics™
Solutions in reach
648 Saratoga Rd. Glenville, NY 12302
www.appliedrobotics.com

TITLE:
OUTLINE ET31.5-022-N-C0000

SIZE	DRAWING NUMBER	REV
D	1507-D67A	01

WEIGHT: 0.05 kg | RoHs COMPLIANT: - | SHT. 2 OF 2