SIZE	DRAWING NUMBER	REV
D	1700072A	01

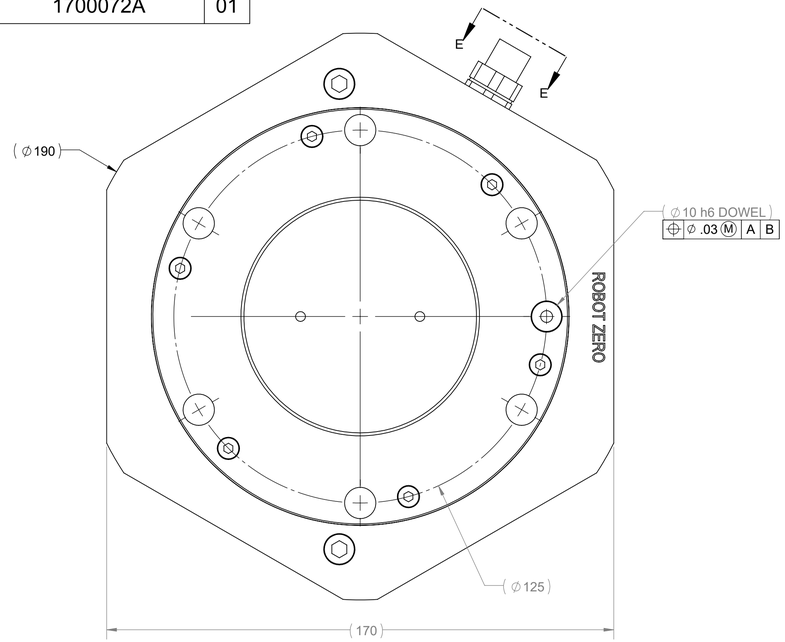

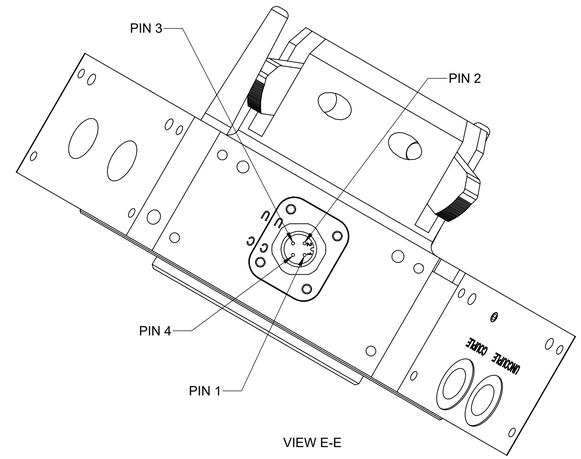

VIEW E-E

ROBOT INTERFACE

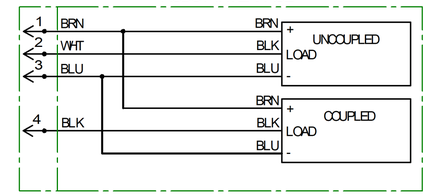

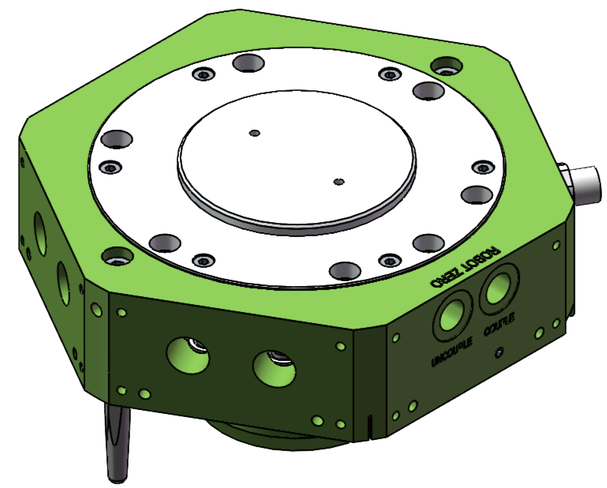

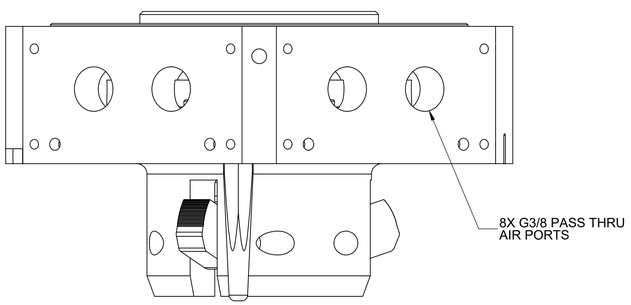

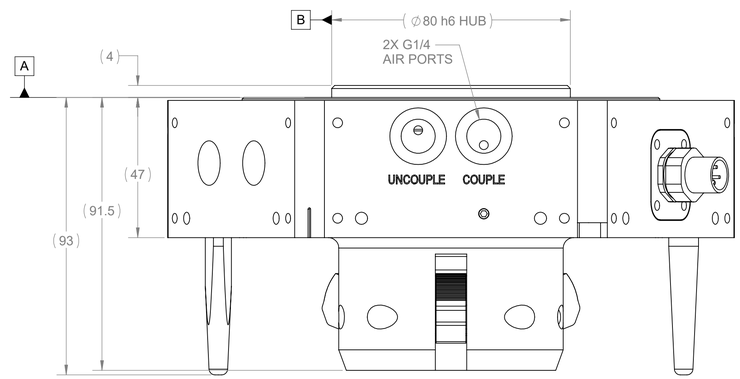

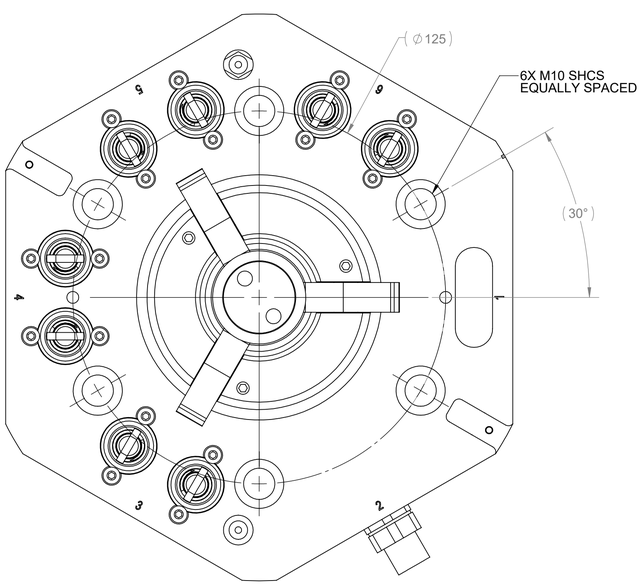

PRINT DATE
11/12/2024

THIRD ANGLE PROJECTION

THE INFORMATION CONTAINED HERE IN IS THE SOLE PROPERTY OF APPLIED ROBOTICS INC. THE INFORMATION IN THE DOCUMENT/FILE IS SUBJECT TO CHANGE WITHOUT NOTICE. APPLIED ROBOTICS MAKES NO WARRANTY OF ANY KIND WITH REGARD TO THIS DOCUMENT/FILE, INCLUDING, BUT NOT LIMITED TO IMPLIED WARRANTIES OR FITNESS FOR A PARTICULAR PURPOSE. APPLIED ROBOTICS INC. SHALL NOT BE LIABLE FOR ANY ERRORS CONTAINED HERE IN OR FOR INCIDENTAL OR CONSEQUENTIAL DAMAGES IN CONNECTION WITH THE PERFORMANCE OR USE OF THIS DOCUMENT/FILE.

DIM. AND TOLERANCING IN ACCORDANCE WITH ANSI Y14.5M-1994

METRIC

UNLESS OTHERWISE SPECIFIED:

UNTOLERANCED DIMS ARE BASIC

⌓ .25 A B C

⌖ ∅ .25 Ⓜ A B C

ALL HOLE DIAMETERS +/- 0.25

INTERNAL RADII & BROKEN EDGES TO BE .13-.38
ALL SURFACE FINISHES 1.6Ra

MAT'L:
Material <not specified>

SURFACE TREATMENT:
-

DR:	J. VALLELUNGA
CHK:	SEE REVISION BLOCK
ENG:	J. VALLELUNGA
MFG:	M. DORIGUZZI
QC:	M. DUDNATH

3D MODEL NUMBER:
1700072A

SCALE: 1:1
DO NOT SCALE DRAWING

ISO 9001
REGISTERED

EFFECTO®
648 Saratoga Rd. Glenville, NY 12302
www.appliedrobotics.com

TITLE:

OUTLINE ER125LP-PM12-080-N-0-C0000

EPSILON TOOL CHANGER

SIZE	DRAWING NUMBER	REV
D	1700072A	01

WEIGHT: 3.14 kg | RoHs COMPLIANT: - | SHT. 2 OF 2