| SIZE | DRAWING NUMBER | REV |
|---|---|---|
| D | 1700303A | 02 |

| REVISIONS | | | | | | |
|---|---|---|---|---|---|---|
| ZONE | REV | DESCRIPTION | DR | CHK | DATE | ECR/ESR NO. |
| | 00 | RELEASE FOR MANUFACTURE. | JV | TM | 7/10/2017 | SCAY-ANGG8J |
| | 01 | 1820052P WAS 098-GR8SK30, 1800267P WAS 098-GR8C30M, 1820029P WAS 098-GR8BC30 | PS | TM | 12/08/2020 | DSCZ-BUSGSP |
| | 02 | RECONFIGURED FOR SQUARE PROFILE | TM | PS | 5-21-25 | TMAA-DGMH7R |

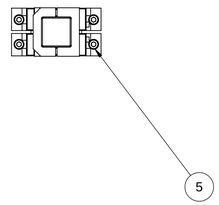


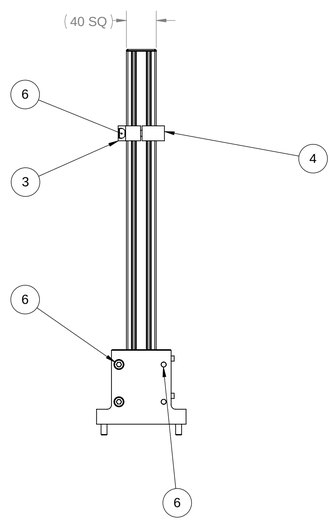


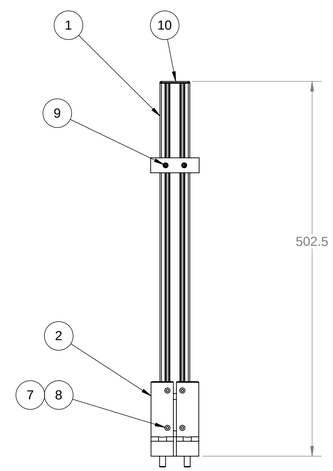


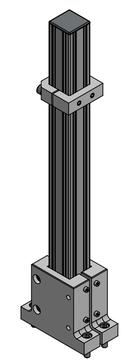

MOUNTING PATTERN

| FOR STEEL FASTENERS IN ALUMINUM | |
|---|---|
| SCREW TORQUE CHART | |
| SIZE | TORQUE |
| M5 | 5 Nm (3.5 in-lbs.) |
| M6 | 7 Nm (4 ft-lbs.) |
| M8 | 18 Nm (14 in-lbs.) |
| M10 | 30 Nm (25 ft-lbs.) |
| M12 | 55 Nm (40 ft-lbs.) |

NOTES
1. FIXTURE BASE KIT, ALL ITEMS PULLED AND BOXED, SHIP UNASSEMBLED. KIT SUPPLIED WITH 500MM LG. STANDARD EXTRUSION LENGTH. EXTRUSION TO BE CUT TO REQUIRED LENGTH AND ASSEMBLED BY CUSTOMER.

| ITEM NO. | QTY | PART NO. | DESCRIPTION |
|---|---|---|---|
| 10 | 1 | 2500285P | CAP, PROFILE 5 40 X 40 |
| 9 | 2 | 49943 | INSERT, THREADED M8-M5 STL |
| 8 | 4 | 48021 | SCR, SOC HD CAP M4 X 25 (SS) |
| 7 | 4 | 2500286P | NUT, T-SLOT PROFILE 5 M4 |
| 6 | 6 | 48050 | SCR, SOC HD CAP M8 X 35 (SS) |
| 5 | 4 | 48048 | SCR, SOC HD CAP M8 X 25 (SS) |
| 4 | 1 | 2500279M | BASE, SUPPORT BAR PROFILE 5 40 X 40 |
| 3 | 1 | 2500280M | CLAMP, SUPPORT BAR PROFILE 5 40X40 |
| 2 | 2 | 2500278M | BASE, SQ PROFILE 40 |
| 1 | 1 | 2500284P | PROFILE 5, 40 X 40 X 500 |

PRINT DATE
6/4/2026

THIRD ANGLE PROJECTION

THE INFORMATION CONTAINED HERE IN IS THE SOLE PROPERTY OF APPLIED ROBOTICS INC. THE INFORMATION IN THE DOCUMENT/FILE IS SUBJECT TO CHANGE WITHOUT NOTICE. APPLIED ROBOTICS MAKES NO WARRANTY OF ANY KIND WITH REGARD TO THIS DOCUMENT/FILE, INCLUDING, BUT NOT LIMITED TO IMPLIED WARRANTIES OR FITNESS FOR A PARTICULAR PURPOSE. APPLIED ROBOTICS INC. SHALL NOT BE LIABLE FOR ANY ERRORS CONTAINED HERE IN OR FOR INCIDENTAL OR CONSEQUENTIAL DAMAGES IN CONNECTION WITH THE PERFORMANCE OR USE OF THIS DOCUMENT/FILE.

METRIC
UNLESS OTHERWISE SPECIFIED:
UNTOLERANCED DIMS ARE BASIC
.25 A B C
⌖ ∅ .25 Ⓜ A B C
ALL HOLE DIAMETERS +/- 0.25
INTERNAL RADII & BROKEN EDGES TO BE .13-.38
ALL SURFACE FINISHES 1.6Ra

MAT'L:

SURFACE TREATMENT:

DIM. AND TOLERANCING IN ACCORDANCE WITH ANSI Y14.5M-1994

| | |
|---|---|
| DR: | T.MARCELLA |
| CHK: | SEE REV BLOCK |
| ENG: | T.MARCELLA |
| MFG: | S.WHIPPLE |
| QC: | S.WHIPPLE |

3D MODEL NUMBER: 1700303A

SCALE: 1:4
DO NOT SCALE DRAWING

ISO 9001 REGISTERED

Applied Robotics™
Solutions in reach
648 Saratoga Rd. Glenville, NY 12302
www.appliedrobotics.com

TITLE:
E31.5-FBA-000 KIT
XCHANGE E31.5 FIXTURE
BASE KIT

| SIZE | DRAWING NUMBER | REV |
|---|---|---|
| D | 1700303A | 02 |

WEIGHT: 1.35 kg | RoHs COMPLIANT: YES | SHT. 1 OF 2