SIZE	DRAWING NUMBER	REV
D	2000274A	00

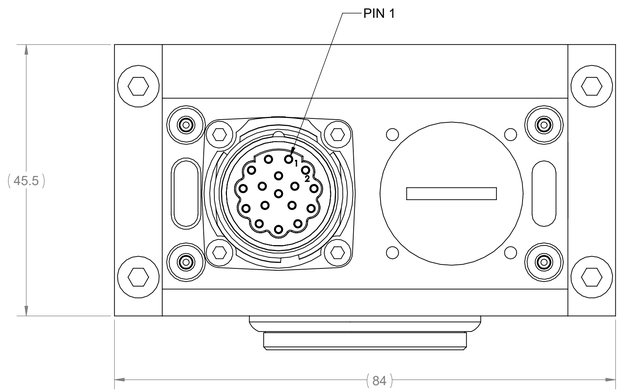

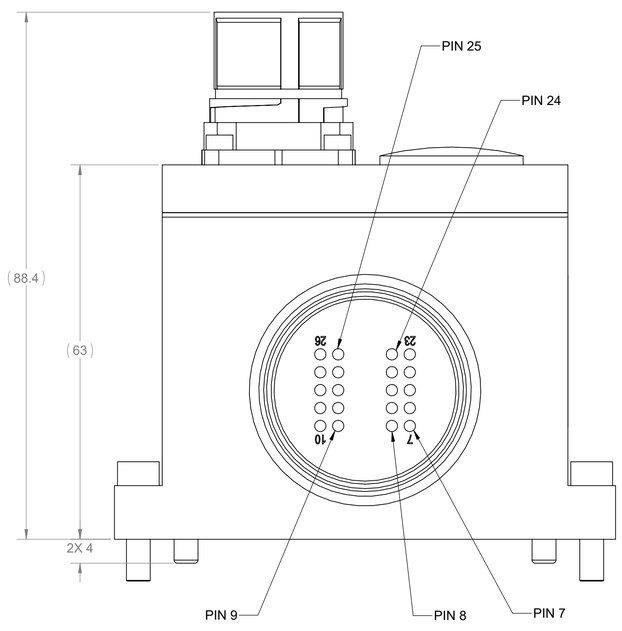

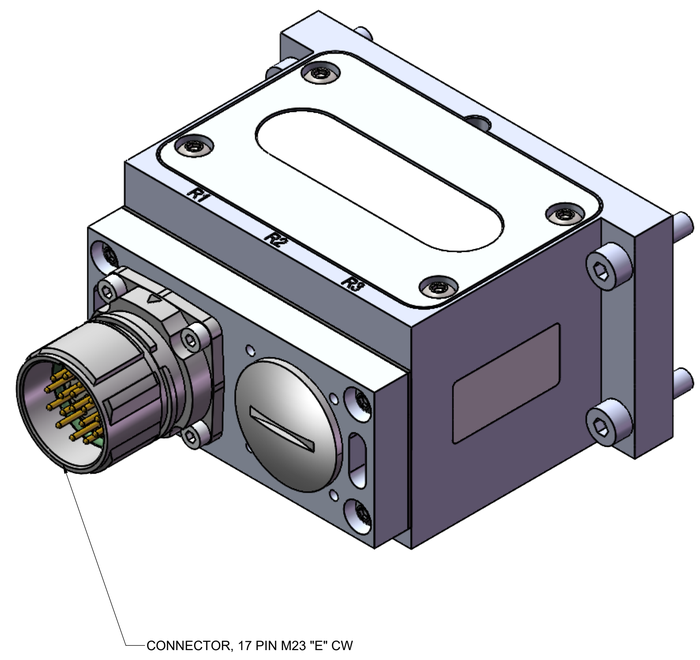

R2
17 PIN M23 "E" CW
A EG A 113 MR 04 00 0201 000

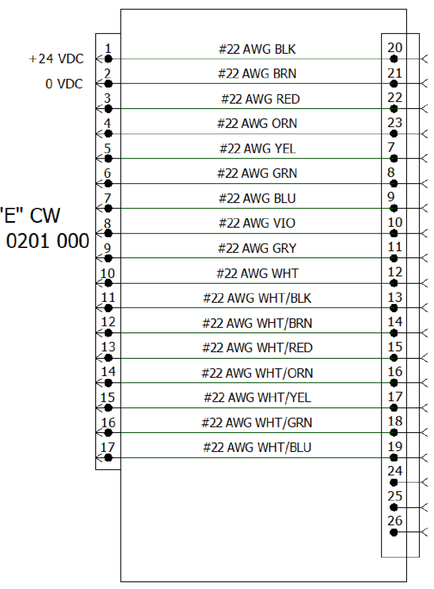

THIRD ANGLE PROJECTION

THE INFORMATION CONTAINED HERE IN IS THE SOLE PROPERTY OF APPLIED ROBOTICS INC. THE INFORMATION IN THE DOCUMENT/FILE IS SUBJECT TO CHANGE WITHOUT NOTICE. APPLIED ROBOTICS MAKES NO WARRANTY OF ANY KIND WITH REGARD TO THIS DOCUMENT/FILE, INCLUDING, BUT NOT LIMITED TO IMPLIED WARRANTIES OR FITNESS FOR A PARTICULAR PURPOSE. APPLIED ROBOTICS INC. SHALL NOT BE LIABLE FOR ANY ERRORS CONTAINED HERE IN OR FOR INCIDENTAL OR CONSEQUENTIAL DAMAGES IN CONNECTION WITH THE PERFORMANCE OR USE OF THIS DOCUMENT/FILE.

PRINT DATE
11/13/2024

DIM. AND TOLERANCING IN ACCORDANCE WITH ANSI Y14.5M-1994

METRIC

UNLESS OTHERWISE SPECIFIED:

UNTOLERANCED DIMS ARE BASIC

.25 A B C

⌖ ∅ .25 Ⓜ A B C

ALL HOLE DIAMETERS +/- 0.25

INTERNAL RADII & BROKEN EDGES TO BE .13-.38
ALL SURFACE FINISHES 1.6Ra

MAT'L:

SURFACE TREATMENT:

DR:	J. VALLELUNGA
CHK:	SEE REVISION BLOCK
ENG:	J. VALLELUNGA
MFG:	D. SADA PILLSBURY
QC:	D. DITONNO

3D MODEL NUMBER:
2000274A

SCALE: 2:1
DO NOT SCALE DRAWING

ISO 9001
REGISTERED

EFFECTO
648 Saratoga Rd. Glenville, NY 12302
www.appliedrobotics.com

TITLE:
OUTLINE E125LP-R-D-M23-17.05-00-N
XCHANGE E125LP ROBOT ELECTRICAL MODULE

SIZE	DRAWING NUMBER	REV
D	2000274A	00

WEIGHT: 0.29 kg | RoHs COMPLIANT: YES | SHT. 2 OF 2