SIZE	DRAWING NUMBER	REV
D	2400822A	00

REVISIONS						
ZONE	REV	DESCRIPTION	DR	CHK	DATE	ECR/ESR NO.
	00	RELEASE FOR MANUFACTURE	TM	PS	09/10/2024	TMAA-CWGQBD

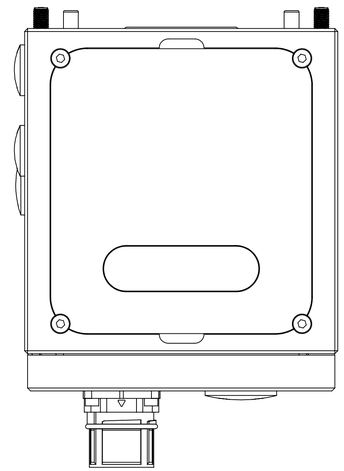

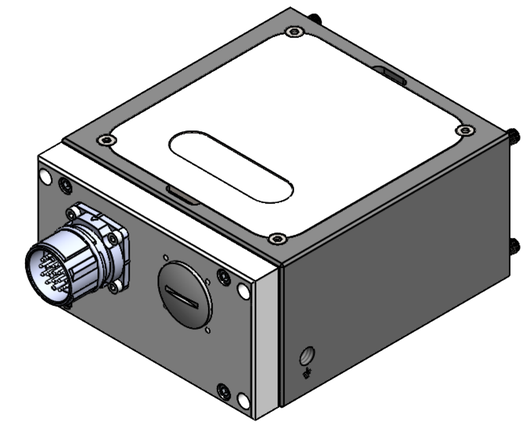

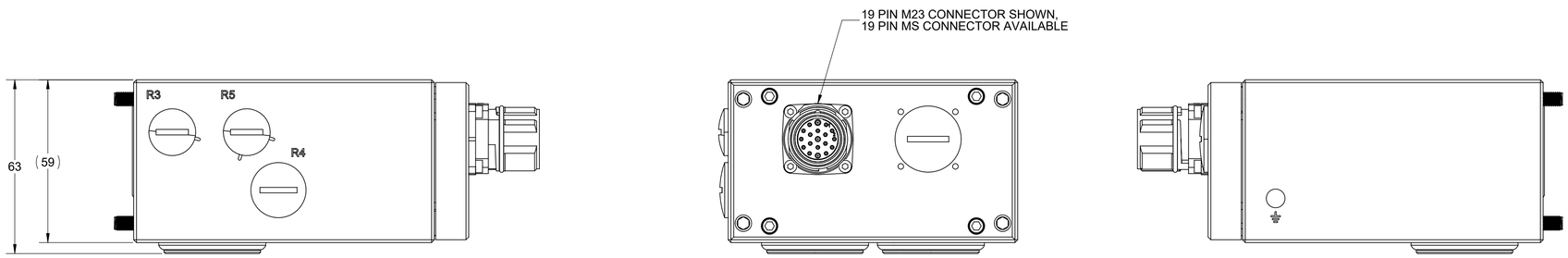

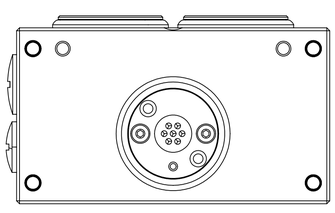

VIEW A-A

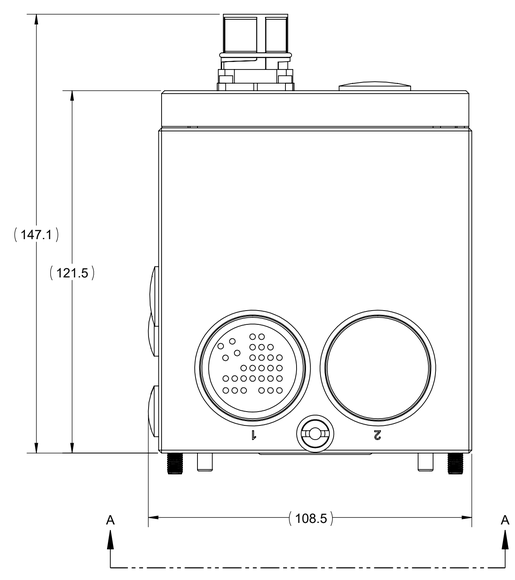

FOR REFERENCE ONLY
DO NOT MANUFACTURE FROM THIS PRINT

PRINT DATE
12/3/2024

THIRD ANGLE PROJECTION

THE INFORMATION CONTAINED HERE IN IS THE SOLE PROPERTY OF APPLIED ROBOTICS INC. THE INFORMATION IN THE DOCUMENT/FILE IS SUBJECT TO CHANGE WITHOUT NOTICE. APPLIED ROBOTICS MAKES NO WARRANTY OF ANY KIND WITH REGARD TO THIS DOCUMENT/FILE, INCLUDING, BUT NOT LIMITED TO IMPLIED WARRANTIES OR FITNESS FOR A PARTICULAR PURPOSE. APPLIED ROBOTICS INC. SHALL NOT BE LIABLE FOR ANY ERRORS CONTAINED HERE IN OR FOR INCIDENTAL OR CONSEQUENTIAL DAMAGES IN CONNECTION WITH THE PERFORMANCE OR USE OF THIS DOCUMENT/FILE.

DIM. AND TOLERANCING IN ACCORDANCE WITH ANSI Y14.5M-1994

METRIC
UNLESS OTHERWISE SPECIFIED:
UNTOLERANCED DIMS ARE BASIC
.25 A B C
⌖ ∅ .25 Ⓜ A B C
ALL HOLE DIAMETERS +/- 0.25
INTERNAL RADII & BROKEN EDGES TO BE .13-.38
ALL SURFACE FINISHES 1.6Ra

MAT'L:

SURFACE TREATMENT:

DR:	T.MARCELLA
CHK:	SEE REVISION BLOCK
ENG:	T.MARCELLA
MFG:	S. WHIPPLE
QC:	S. WHIPPLE

3D MODEL NUMBER:
2400822A

SCALE: 1:1
DO NOT SCALE DRAWING

ISO 9001 REGISTERED

EFFECTO®
648 Saratoga Rd. Glenville, NY 12302
www.appliedrobotics.com

TITLE:
DISCRETE A IO, ROBOT BASE, ROBOT BASE ROBOT SIDE GENERIC I/O MODULE

SIZE	DRAWING NUMBER	REV
D	2400822A	00

WEIGHT: 1.02 kg | RoHs COMPLIANT: YES | SHT. 1 OF 1